Talis Classic
Single Lever Shower Mixer DN15 for exposed installation
14161XXX
04/08 - 12/08

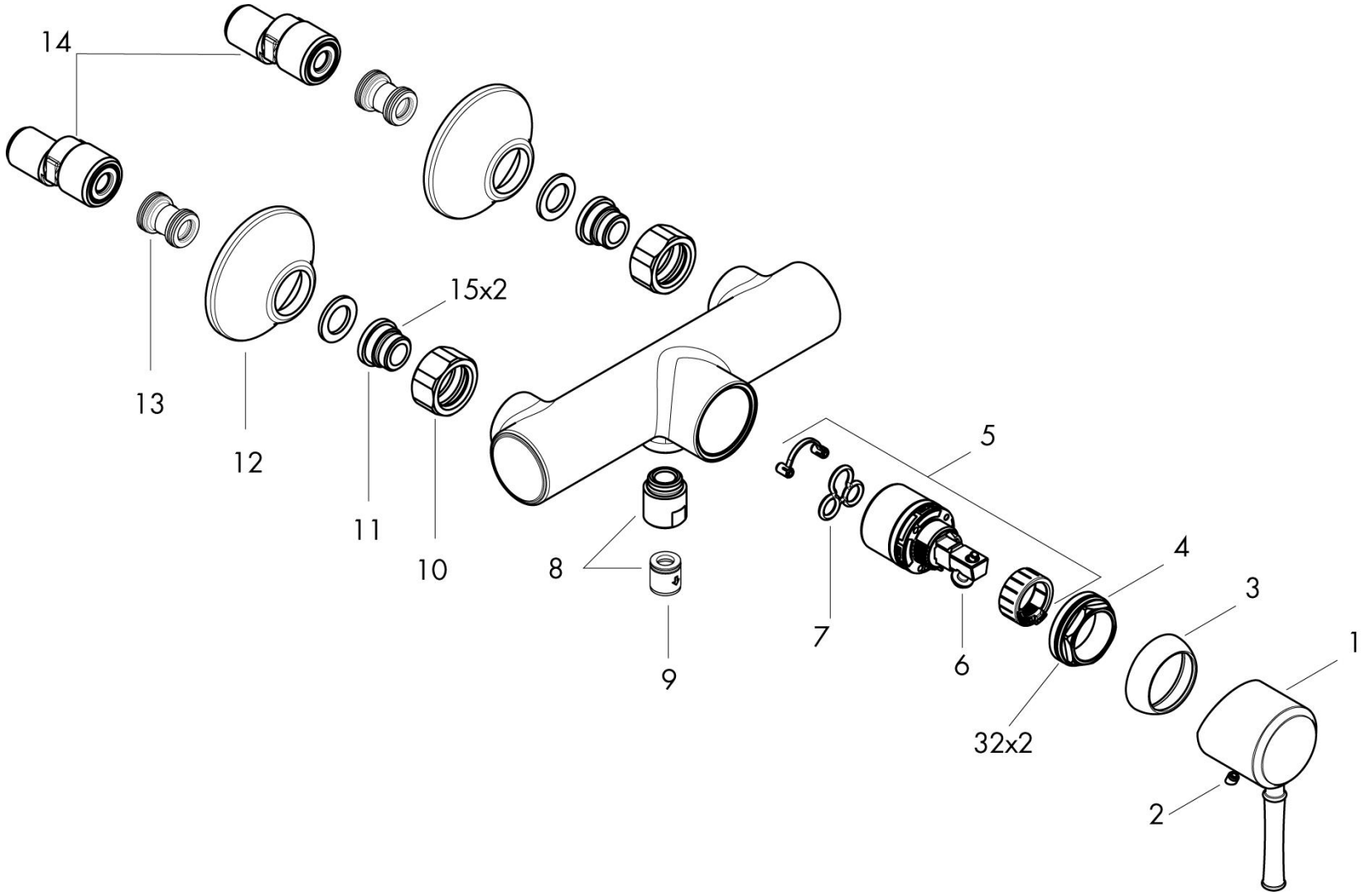

Talis Classic
Single Lever Shower Mixer DN15 for exposed installation
14161XXX
04/08 - 12/08

Item no.	Description	Article no.	PC	PU
1	handle	14193XXX	08*	1
2	screw cover	96338000	01	1
3	flange	97406XXX	06*	1
4	nut	97209000	05	1
5	cartridge, assy	92730000	11	1
6	locking screw for handle	95140000	02	1
7	seal	95008000	03	1
8	hose connection	96044XXX	07*	1
9	set of non return valves DW 15	94074000	05	1
10	nut	96157XXX	08*	1
11	connecting thread	97220000	05	1
12	escutcheon Ø 70 mm	96346XXX	06*	1
13	noise reduction	96429000	02	1
14	ball S - union	94140000	10	1