cersanit

wanna **KALIOPE** 153x100 lewa

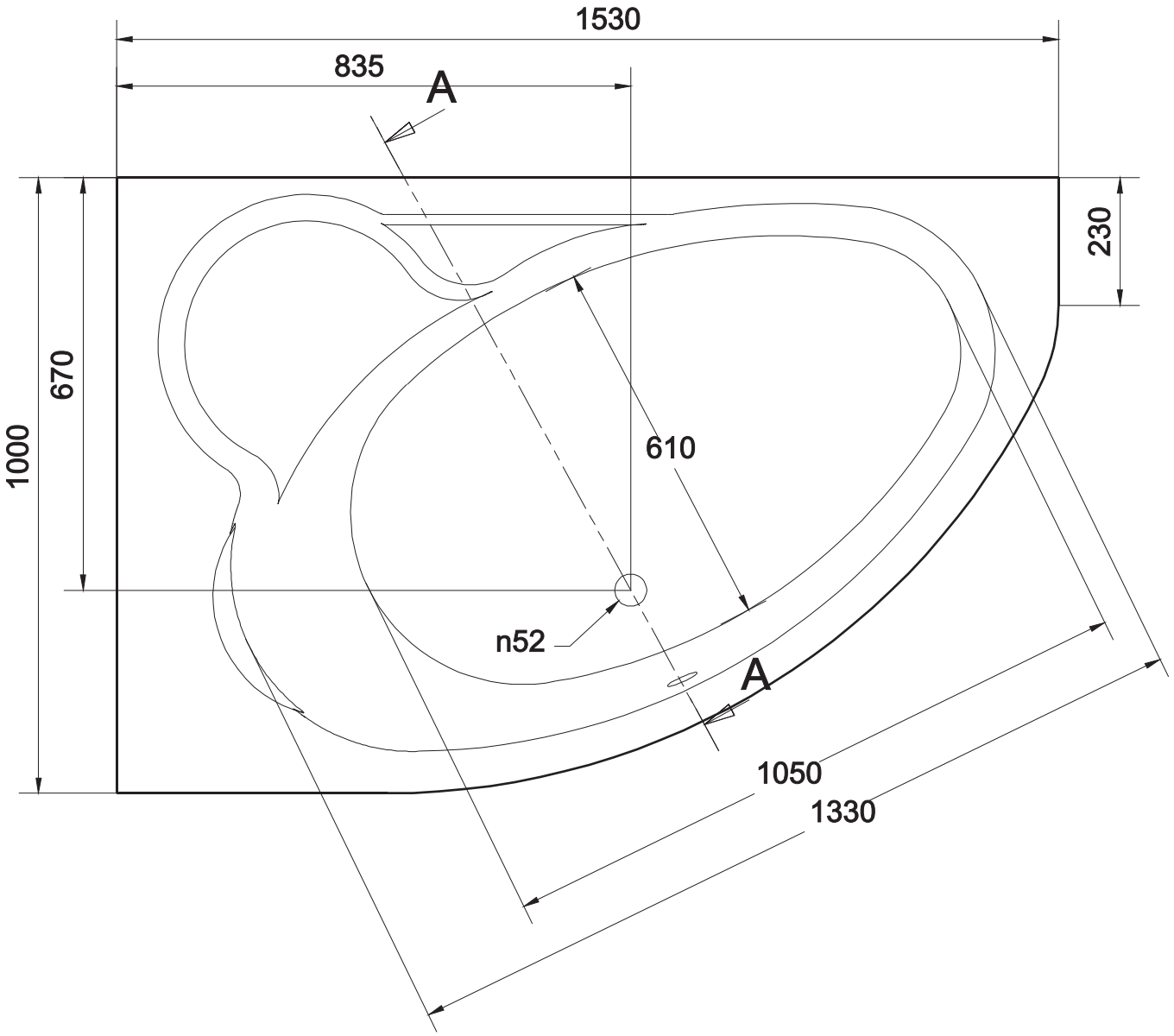
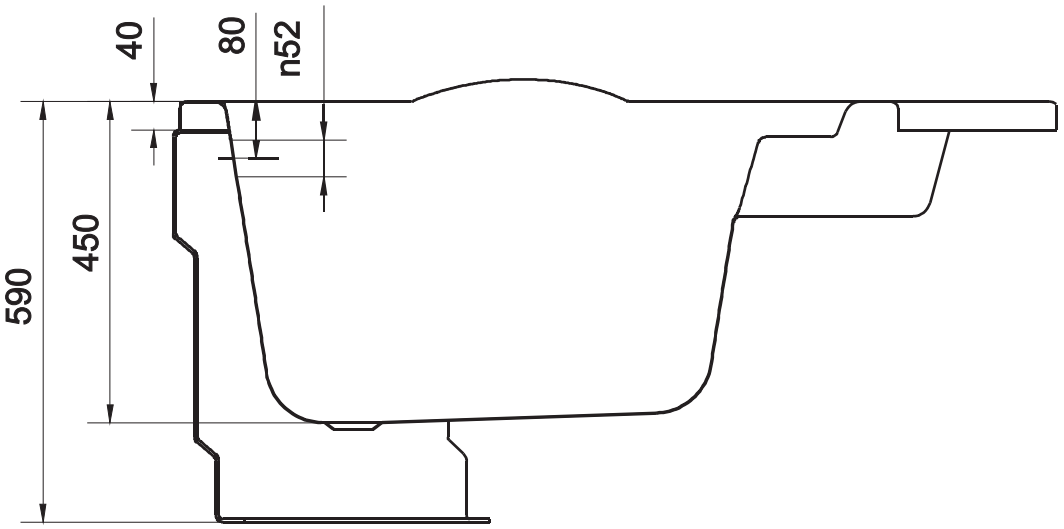
A-A