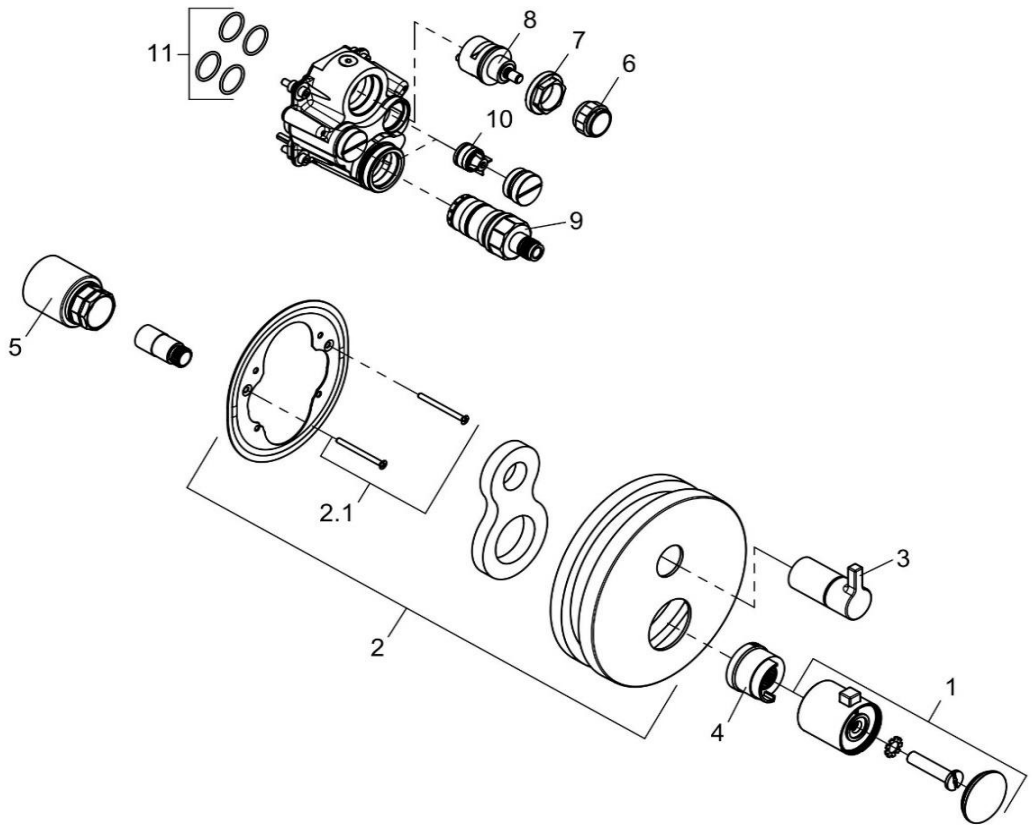


| 208300515 | | Unterputz-Wannenfüll- und Brause-Thermostatarmatur | concealed thermostatic bath- and shower mixer |
|---|---|---|---|
| 1 | 7385405-00 | THERMOSTATGRIFF | HANDLE FOR THERMOSTAT |
| 2 | 7385205-00 | UP - ROSETTE | ESCUTCHEON, CONCEALED |
| 2.1 | 7446335-00 | SCHRAUBEN SET | SCREW SET |
| 3 | 7385505-00 | UMSTELLGRIFF / ABSPERRGRIFF | DIVERTER HANDLE / SHUT-OFF HANDLE |
| 4 | 93091406-00 | JUSTIERBUCHSE | SLEEVE FOR ADJUSTMENT |
| 5 | 92029905-00 | KOPFSTÜCKVERLÄNGERUNG | EXTENSION FOR HEAD PIECE |
| 6 | 92241637-00 | ADAPTER | ADAPTER |
| 7 | 92256637-00 | SPANNSCHRAUBE | FASTENING SCREW |
| 8 | 7331937-00 | DIVERTER KARTUSCHE | DIVERTER CARTRIDGE |
| 9 | 7639000-00 | THERMOSTAT | TEMPERATURE CONTROL UNIT |
| 10 | 7479700-00 | RÜCKFLUSSVERHINDERER | BACK FLOW PREVENTER |
| 11 | 7301100-00 | DICHTUNGSSATZ | SEALING SET |
| | | | |
| | | | |
| | | | |
| | | | |
| | | | |
| | | | |
| | | | |
| | | | |
| | | | |
| | | | |